13790510059

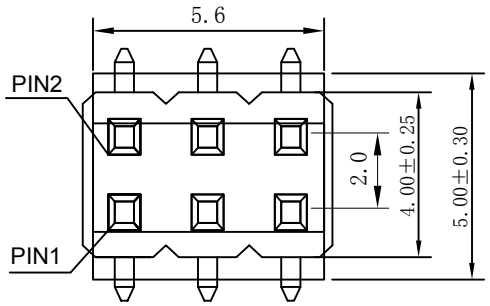

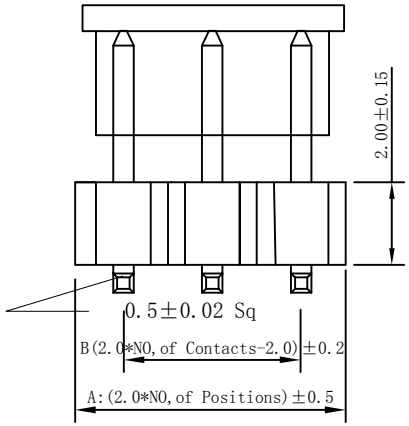

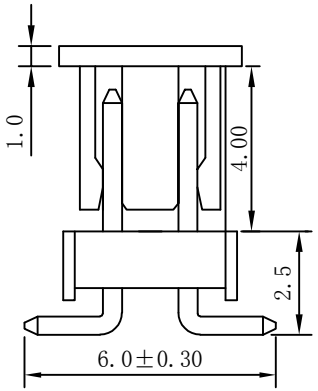

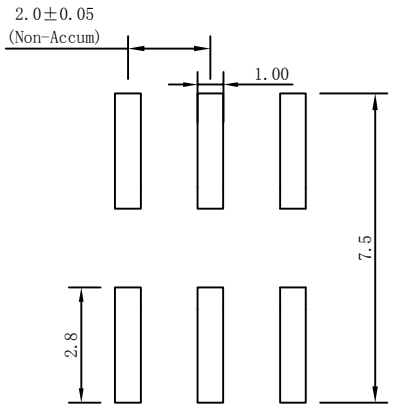

PCB LAYOUT

Dimensions list

Contacts Per row	Dimensions A	Dimensions B	Contacts Per row	Dimensions A	Dimensions B
1	2.0	0	21	42.0	40.0
2	4.0	2.0	22	44.0	42.0
3	6.0	4.0	23	46.0	44.0
4	8.0	6.0	24	48.0	46.0
5	10.0	8.0	25	50.0	48.0
6	12.0	10.0	26	52.0	50.0
7	14.0	12.0	27	54.0	52.0
8	16.0	14.0	28	56.0	54.0
9	18.0	16.0	29	58.0	56.0
10	20.0	18.0	30	60.0	58.0
11	22.0	20.0	31	62.0	60.0
12	24.0	22.0	32	64.0	62.0
13	26.0	24.0	33	66.0	64.0
14	28.0	26.0	34	68.0	66.0
15	30.0	28.0	35	70.0	68.0
16	32.0	30.0	36	72.0	70.0
17	34.0	32.0	37	74.0	72.0
18	36.0	34.0	38	76.0	74.0
19	38.0	36.0	39	78.0	76.0
20	40.0	38.0	40	80.0	78.0

■SPECIFICATIONS

- ●Voltage rating:250V AC/DC;
- ●Current rating:2A Mps;
- ●Withstanding Voltage:1000V AC/minute
- ●Insulatin resistance:500MΩ Min
- ●Temperature range:-20℃~+85℃
- ●Contact resistance:30mΩ Max
- ●Plating:Gold flash
- ●Contact Material:Brass
- ●Insulator Material:NY-6T

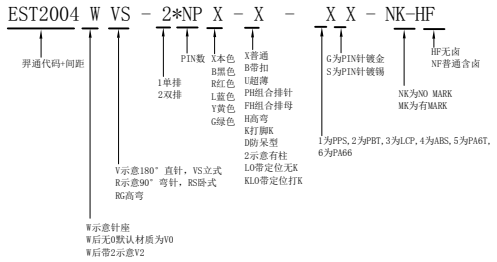

东莞市羿通实业有限公司
DONGGUAN EASTOM ELECTRONIC Co.,Ltd.

				料号PART NO:	EST2004WVS-1*NPX-PH		一般公差 GENERAL TOLERANCE X.X ±0.30 X.XX ±0.25 ANGLE ±1°
				品名 TITLE:	杜邦2.0立式双排排针		
				材料:	单位: MM	包装规格:	比例: 1:1
日期版次 REVISION	日 期 DATE	变更内容 DESCRIPTION	核 准 APPROVALBY	制图:	审核:	核准:	日期: 2023.6.8

XCL